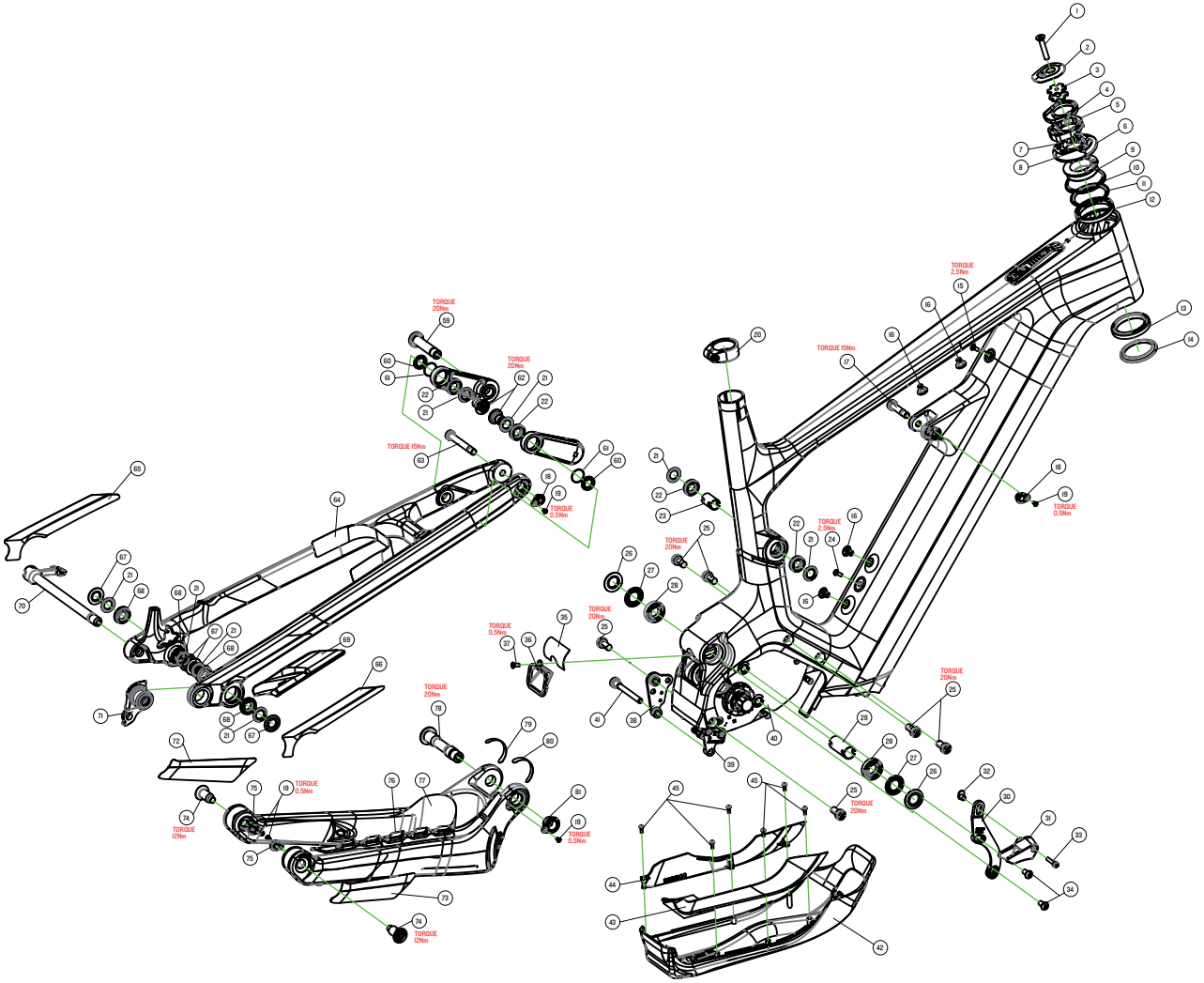

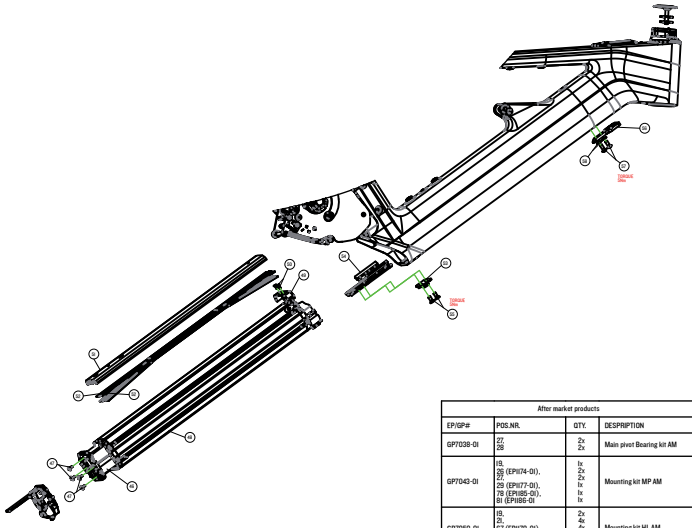

After market products				
EP/GP#	POS.NR.	QTY.	DESPRIPTION	CANYON#
GP7038-01	27, 28	2x 2x	Main pivot Bearing kit AM	10007487
GP7043-01	19, 26 (EP1174-01), 27, 29 (EP1177-01), 78 (EP1185-01), 81 (EP1186-01	1x 2x 2x 1x 1x 1x	Mounting kit MP AM	10007492
GP7050-01	19, 21, 67 (EP1179-01), 74 (EP1184-01), 75 (EP1187-01)	2x 4x 4x 2x 2x	Mounting kit HL AM	10007496
GP7040-01	21, 68	2x 2x	HL Bearing kit AM	10007489
	71	1x	RDHA SRAM UDH Schaltauge UNI bk	10006305
GP0437-01	30-34	1x	Chainguide AM	10011113
GP7064-01	16 (E40-10)	4x	Rubber Plug Kit AM	10007501
GP7051-01	17 (EP1176-01), 18 (EP1364-01), 19, 63 (EP1181-01)	1x 1x 1x 1x	Mounting Kit Rear Shock AM	10007497
GP7273-01	9, 12, 13	1x 1x 1x	HSP ACR BEAR+CR MTB 3 AM	10010431
GP7094-01	36 (EP1315-01), 37	1x 1x	Cable Routing MOB5 AM	10007915
GP7277-01	38 (EP1686-01), 39 (EP1685-01)	1x 1x	Motor Mounting Plates AM	10011053
EP1684-01	76 (EP1684-01)	1x	Chainstay Prot. AM	10011112
GP7039-01	21, 22	2x 2x	Rocker arm bearing kit AM	10007488
GP7046-01	21, 60 (EP1196-01), 61, 62 (EP1194-01)	2x 2x 2x 2x	Mounting Kit SS-Pivot AM	10007495
GP7044-01	21, 23 (EP1178-01), 59 (EP1195-01)	2x 2x 1x	MTG-Kit R-Pivot M121 AM	10007493
GP7288-02	53 (EP1688-01), 54 (EP1687-01), 55 56 (EP1689-01), 57 58	1x 1x 2x 1x 2x 2x	MTG Battery AM	10012785
GP0393-01	52, 53	1x 1x	Cable Channel AM	10011193
GP7286-01	35 (EP1896-01), 64 (EP1899-01), 65 (EP1898-01), 66 (EP1897-01), 69 (EP1883-01), 72 (EP1901-01), 73 (EP1900-01), 77 (EP1902-01), 79 (EP1904-01), 80 (EP1903-01)	1x 1x 1x 1x 1x 1x 1x 1x 1x 1x	Prot. Foil M158 AM	10011206
GP7287-01	41 (EP1827-01), 42-45 (GP0447-01)	1x 1x	Bashguard AM	10011306
SC0001-01	20	1x	SC CAYN Seatclamp SC0001-01 34.9 bk AM	168927
GP0254-01	70	1x	TA 148x12 UDH bk AM	10010452
GP7042-01	1, 2 (EP1118-01), 4 (EP0674-01)	1x 1x 2x	Headset spacer kit AM	10007491

STRIVE:ON | M158-01

REVISION 00 | 01.06.2023

CANYON

THIS TECHNICAL DOCUMENT, INCLUDING ANY PICTURES AND VIDEOS PROVIDED, IS COPYRIGHT-PROTECTED AND INTENDED SOLELY FOR USE IN YOUR OPERATION BY DULY AUTHORIZED PERSONNEL